tesa® 6075 Premium hand dispenser
suitable for tapes up to 75mm width

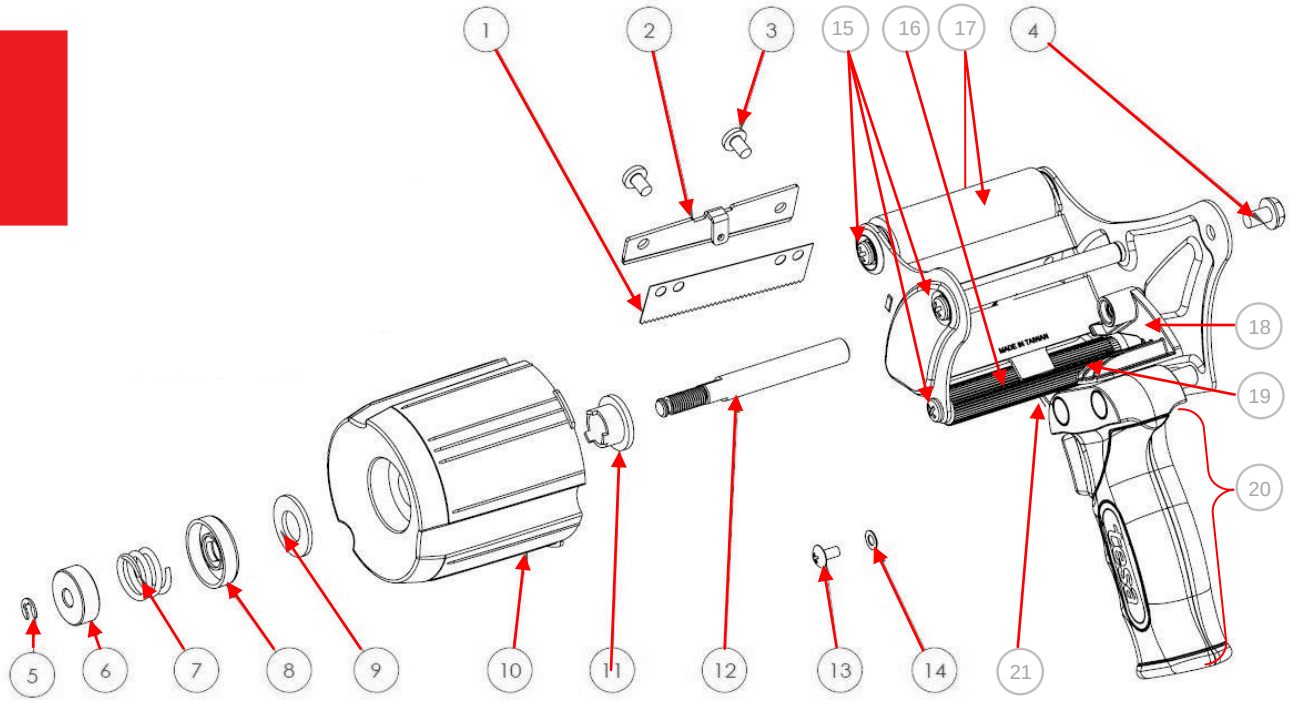

Spare part list

Item	Description
1	Blade
2	Blade cover
3	Screw
4	Hexagonal screw
5	E-type washer
6	Adjustable metal washer
7	Spring
8	Spring cover
9	Black Washer
10	Tape core
11	Core base
12	Metal bar
13	Screw for lever
14	Washer for lever
15	Casing screws
16	Ripped roller
17	Pressure roller, incl. Pivot and screws
18	Safety catch
19	Spring for the tape release mechanism
20	Entire handle
21	Tape release mechanism

Service

For Spare parts and repairs of tesa dispensers, please contact:

B&K Apparatebau
KNECHT GmbH
Neustrasse 19
56348 Weisel
Germany

dispenserservice@tesa.com
Phone: +49 (0)6774/1217
Fax: +49 (0)6774/1438
ref. Mr. Handschuh

Maintenance

Adhesive residues are easy to remove with acetone.